Chapter 5

LINEAR INEQUALITIES AND LINEAR PROGRAMMING

EXERCISE 5.1

Q.1: Graph the solution set of each of the following linear inequality in xy-plane.

(i)	$2x + y \leq 6$	**(ii)**	$3x + 7y \geq 21$	**(iii)**	$3x - 2y \geq 6$
(iv)	$5x - 4y \leq 20$	**(v)**	$2x + 1 \geq 0$	**(vi)**	$3y - 4 \leq 0$

Solution:

(i) $2x + y \leq 6$

The associated equation is

$2x + y = 6$ ..... (1)

<u>x-intercept</u>

Put $y = 0$ in eq. (1)

$2x + 0 = 6$

$x = \frac{6}{2} = 3$

$\therefore$ Point is (3, 0)

<u>y-intercept</u>

Put $x = 0$ in eq. (1)

$2(0) + y = 6$

$y = 6$

$\therefore$ Point is (0, 6)

<u>Test Point</u>

Put (0, 0) in

$2x + y < 6$

$2(0) + 0 < 6$

$0 < 6$

Which is true.

$\therefore$ Graph of an inequality $2x + y \leq 6$ will be towards the origin side.

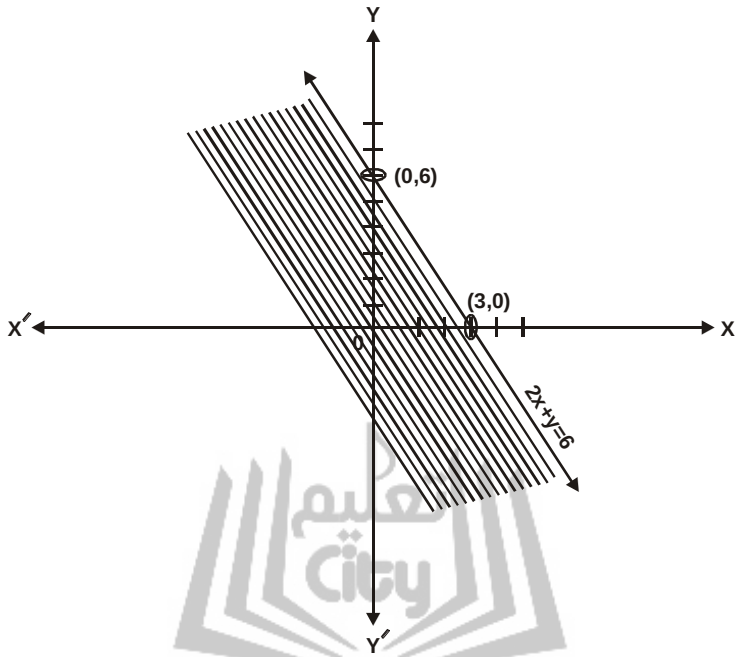

(ii) $\mathbf{3x + 7y \geq 21}$

The associated equation is

$3x + 7y = 21$ ..... (1)

<u>x-intercept</u>

Put $y = 0$ in eq. (1)

$3x + 7(0) = 21$

$3x = 21$

$x = \frac{21}{3} = 7$

$\therefore$ Point is (7, 0)

<u>y-intercept</u>

Put $x = 0$ in eq. (1)

$3(0) + 7y = 21$

$7y = 21$

$$y = \frac{21}{7} = 3$$

$\therefore$ Point is (0, 3)

<u>Test Point</u>

Put (0, 0) in

$3x + 7y > 21$

$3(0) + 7(0) > 21$

$0 > 21$

Which is false.

$\therefore$ Graph of an inequality $3x + 7y \geq 21$ will not be towards the origin side.

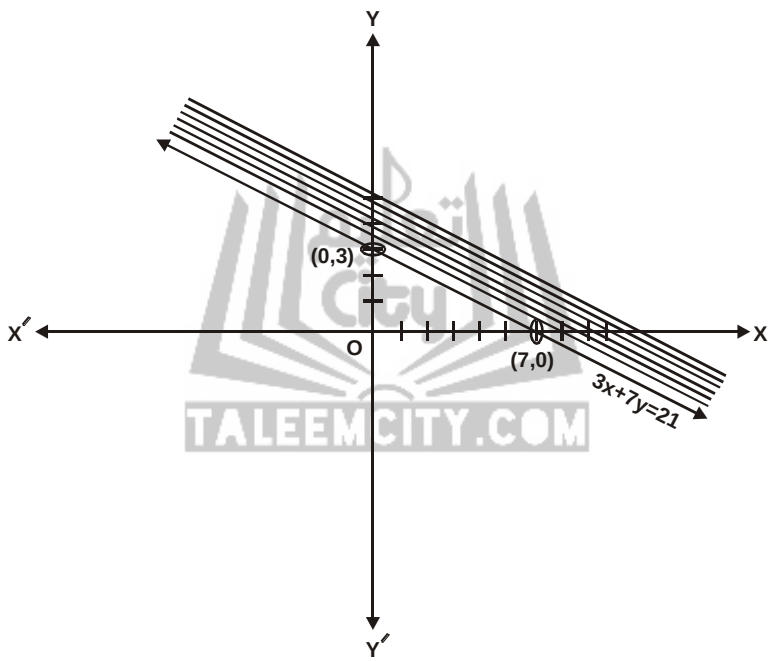

(iii) $\mathbf{3x - 2y \geq 6}$

The associated equation is

$3x - 2y = 6$ ..... (1)

<u>x-intercept</u>

Put $y = 0$ in eq. (1)

$3x - 2(0) = 6$

$3x = 6$

$$x = \frac{6}{3} = 2$$

$\therefore$ Point is (2, 0)

<u>y-intercept</u>

Put $x = 0$ in eq. (1)

$3(0) - 2y = 6$

$-2y = 6$

$$y = \frac{6}{-2} = -3$$

$\therefore$ Point is $(0, -3)$

<u>Test Point</u>

Put $(0, 0)$ in

$3x - 2y > 6$

$3(0) + 2(0) > 6$

$0 > 6$

Which is false.

$\therefore$ Graph of an inequality $3x - 2y \geq 6$ will not be towards the origin side.

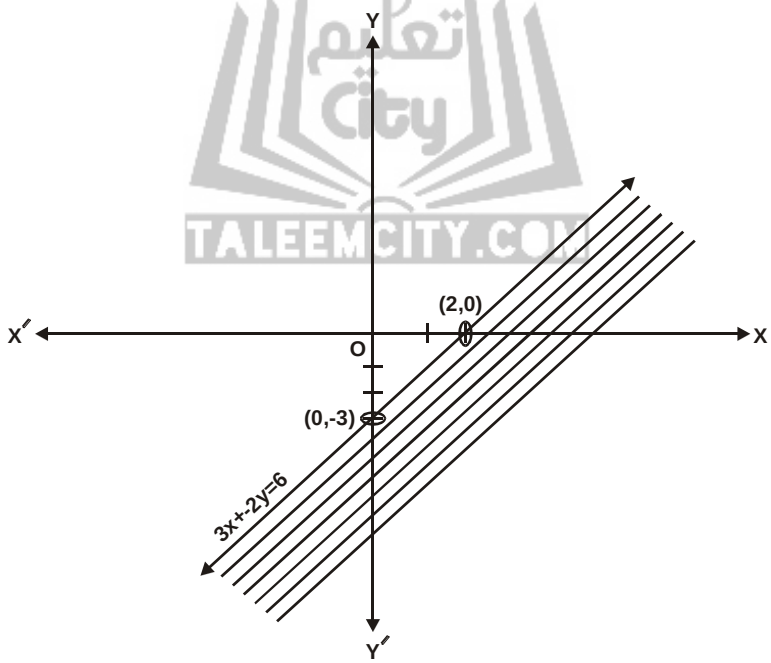

(iv) $\mathbf{5x - 4y \leq 20}$

The associated equation is

$5x - 4y = 20$ ..... (1)

<u>x-intercept</u>

Put $y = 0$ in eq. (1)

$$5x - 4(0) = 20$$
$$5x = 20$$
$$x = \frac{20}{5} = 4$$

$\therefore$ Point is (4, 0)

<u>y-intercept</u>

Put $x = 0$ in eq. (1)

$$5(0) - 4y = 20$$
$$-4y = 20$$
$$y = \frac{20}{-4} = -5$$

$\therefore$ Point is (0, – 5)

<u>Test Point</u>

Put (0, 0) in

$$5x - 4y < 20$$
$$5(0) - 4(0) < 20$$
$$0 < 20$$

Which is true.

$\therefore$ Graph of an inequality $5x - 4y \leq 20$ will be towards the origin side.

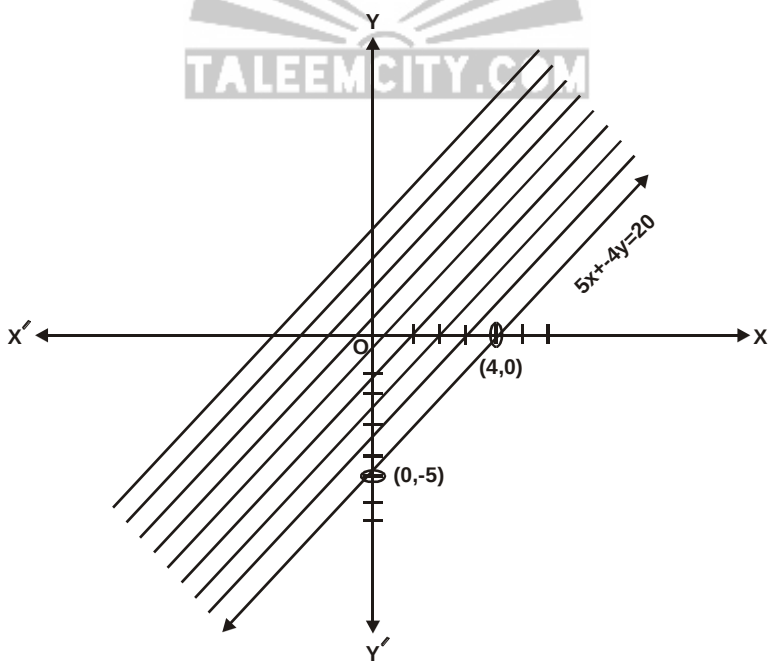

(v) $\mathbf{2x + 1 \geq 0}$

The associated equation is

$$2x + 1 = 0$$
$$2x = -1$$
$$x = \frac{-1}{2}$$

Put $x = 0$ in

$$2x + 1 > 0$$
$$2(0) + 1 > 0$$
$$1 > 0$$

Which is true.

$\therefore$ Graph of an inequality $2x + 1 \geq 0$ will be towards the origin side.

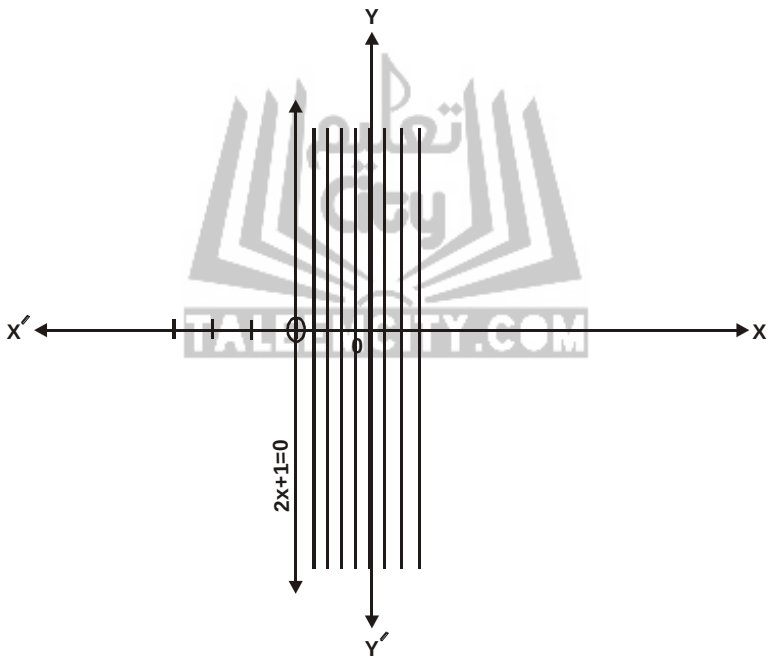

(vi) $\mathbf{3y - 4 \leq 0}$

The associated equation is

$$3y - 4 = 0$$
$$3y = 4$$
$$y = \frac{4}{3}$$

Put $y = 0$ in

$3y - 4 < 0$

$3(0) - 4 < 0$

$-4 < 0$

Which is true.

$\therefore$ Graph of an inequality $3y - 4 \leq 0$ will be towards the origin side.

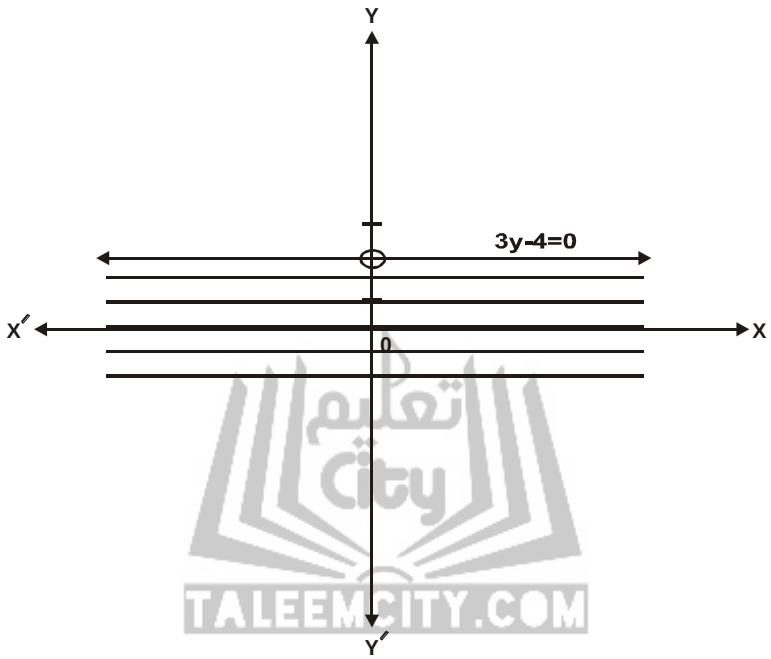

Q.2: Indicate the solution set of the following systems of linear inequalities by shading.

(i) $2x - 3y \leq 6$, $2x + 3y \leq 12$

(ii) $x + y \geq 5$, $x - y \leq 1$

(iii) $3x + 7y \geq 21$, $x - y \leq 2$

(iv) $4x - 3y \leq 12$

$x \geq \frac{-3}{2}$ **(Lhr. Board 2011) (Guj. Board 2008)**

(v) $3x + 7y \geq 21$ **(Lhr. Board 2011)**

$y \leq 4$

Solution:

(i) $2x - 3y \leq 6$

$2x + 3y \leq 12$

The associated equations are

$2x - 3y = 6$ ..... (1)

$2x + 3y = 12$ ..... (2)

<u>x-intercept</u>

Put $y = 0$ in eq. (1)

$2x - 3(0) = 6$

$2x = 6$

$x = \frac{6}{2} = 3$

$\therefore$ Point is (3, 0)

<u>y-intercept</u>

Put $x = 0$ in eq. (1)

$2(0) - 3y = 6$

$-3y = 6$

$y = \frac{6}{-3} = -2$

$\therefore$ Point is (0, – 2)

<u>x-intercept</u>

Put $y = 0$ in eq. (2)

$2x + 3(0) = 12$

$2x = 12$

$x = \frac{12}{2} = 6$

$\therefore$ Point is (6, 0)

<u>y-intercept</u>

Put $x = 0$ in eq. (2)

$2(0) + 3y = 12$

$3y = 12$

$y = \frac{12}{3} = 4$

$\therefore$ Point is (0, 4)

<u>Test Point</u>

Put (0, 0) in

$2x - 3y < 6$

$2(0) - 3(0) < 6$

$0 < 6$

Which is true.

$\therefore$ Graph of an inequality $2x - 3y \leq 6$ will be towards the origin side.

Put (0, 0) in

$2x + 3y < 12$

$2(0) - 3(0) < 12$

$0 < 12$

Which is true.

$\therefore$ Graph of an inequality $2x + 3y \leq 12$ will be towards the origin side.

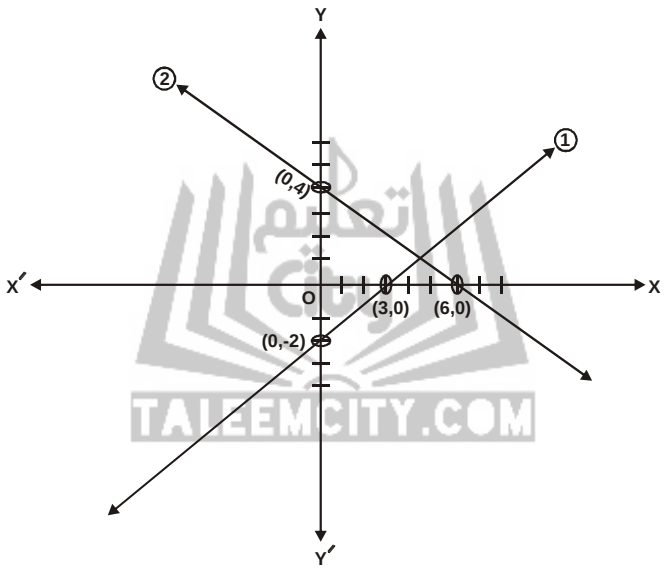

(ii) $\mathbf{x + y \geq 5}$

$\mathbf{x - y \leq 1}$

The associated equations are

$x + y = 5$ ..... (1)

$x - y = 1$ ..... (2)

<u>x-intercept</u>

Put $y = 0$ in eq. (1)

$x + 0 = 5$

$x = 5$

$\therefore$ Point is (5, 0)

<u>y-intercept</u>

Put $x = 0$ in eq. (1)

$0 + y = 5$

$y = 5$

$\therefore$ Point is (0, 5)

<u>x-intercept</u>

Put $y = 0$ in eq. (2)

$x - 0 = 1$

$x = 1$

$\therefore$ Point is (1, 0)

<u>y-intercept</u>

Put $x = 0$ in eq. (2)

$0 - y = 1$

$y = -1$

$\therefore$ Point is (0, – 1)

<u>Test Point</u>

Put (0, 0) in

$x + y > 5$

$0 + 0 > 5$

$0 > 5$

Which is false.

$\therefore$ Graph of an inequality $x + y \geq 5$ will not be towards the origin side.

Put (0, 0) in

$x - y < 1$

$0 - 0 < 1$

$0 < 1$

Which is true.

$\therefore$ Graph of an inequality $x - y \leq 1$ will be towards the origin side.

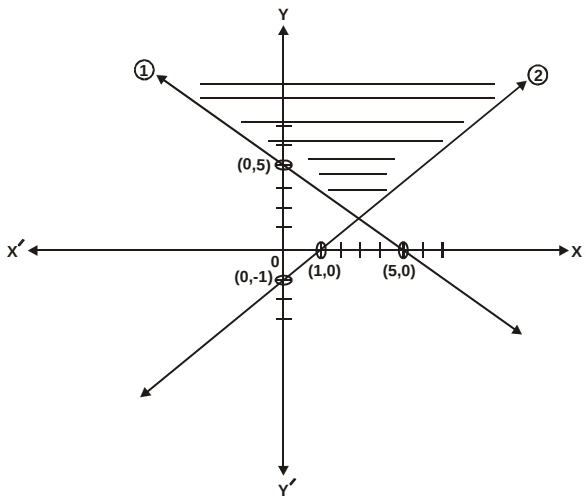

(iii) $\mathbf{3x + 7y \geq 21}$

$\mathbf{x - y \leq 2}$

The associated equations are

$3x + 7y = 21$ ..... (1)

$x - y = 2$ ..... (2)

<u>x-intercept</u>

Put $y = 0$ in eq. (1)

$3x + 7(0) = 21$

$3x = 21$

$x = \frac{21}{3} = 7$

$\therefore$ Point is (7, 0)

<u>y-intercept</u>

Put $x = 0$ in eq. (1)

$3(0) + 7y = 21$

$7y = 21$

$y = \frac{21}{7} = 3$

$\therefore$ Point is (0, 3)

<u>x-intercept</u>

Put $y = 0$ in eq. (2)

$x - 0 = 2$

$x = 2$

$\therefore$ Point is (2, 0)

<u>y-intercept</u>

Put $x = 0$ in eq. (2)

$0 - y = 2$

$y = -2$

$\therefore$ Point is (0, – 2)

<u>Test Point</u>

Put (0, 0) in

$3x + 7y > 21$

$3(0) + 7(0) \quad > \quad 21$

$0 > 21$

Which is false.

$\therefore$ Graph of an inequality $3x + 7y \geq 21$ will not be towards the origin side.

Put (0, 0) in

$x - y \quad < \quad 2$

$0 - 0 \quad < \quad 2$

$0 \quad < \quad 2$

Which is true.

$\therefore$ Graph of an inequality $x - y \leq 2$ will be towards the origin side.

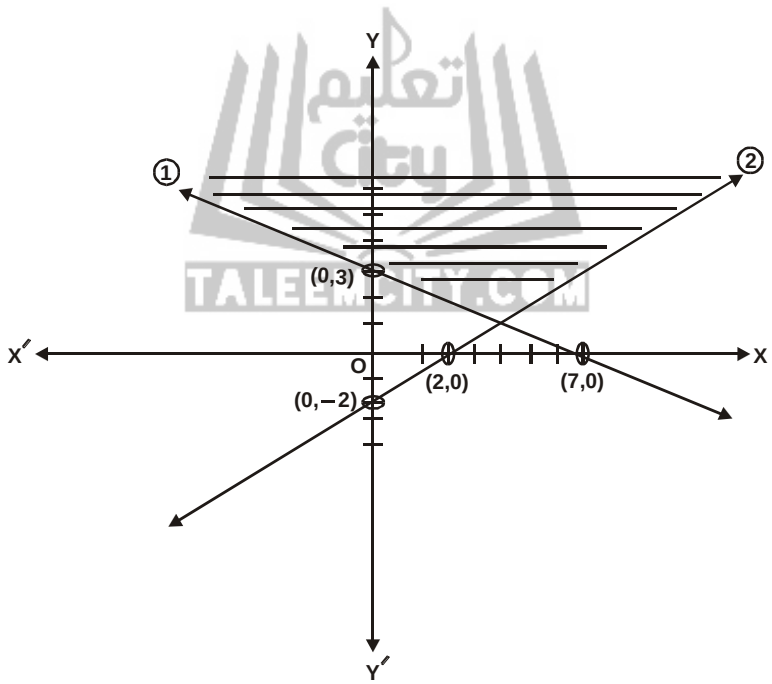

(iv) $\mathbf{4x - 3y \leq 12}$

$\mathbf{x \geq \frac{-3}{2}}$

The associated equations are

$4x - 3y \quad = \quad 12 \qquad ..... (1)$

$$x = \frac{-3}{2} \qquad ..... (2)$$

<u>x-intercept</u>

Put $y = 0$ in eq. (1)

$$4x - 3(0) = 12$$

$$4x = 12$$

$$x = \frac{21}{4} = 3$$

$\therefore$ Point is (3, 0)

<u>y-intercept</u>

Put $x = 0$ in eq. (1)

$$4(0) - 3y = 12$$

$$-3y = 12$$

$$y = \frac{12}{-3} = -4$$

$\therefore$ Point is (0, – 4)

<u>Test Point</u>

Put (0, 0) in

$$4x - 3y < 12$$

$$4(0) - 3(0) < 12$$

$$0 < 12$$

Which is true.

$\therefore$ Graph of an inequality $4x - 3y \leq 12$ will be towards the origin side.

Put $x = 0$ in

$$x > \frac{-3}{2}$$

$$0 > \frac{-3}{2}$$

Which is true.

$\therefore$ Graph of an inequality $x \geq \frac{-3}{2}$ will be towards the origin side.

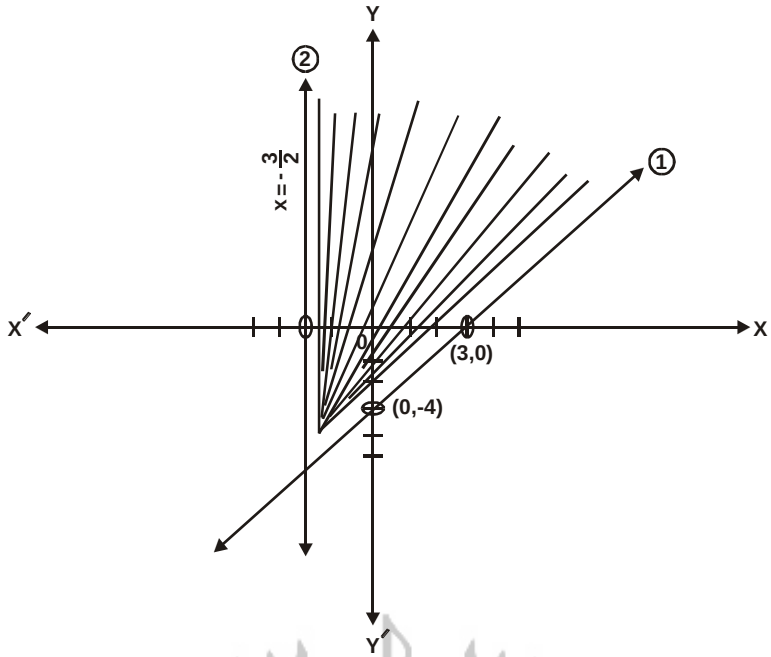

(v) $\mathbf{3x + 7y \geq 21}$

$\mathbf{y \leq 4}$

The associated equations are

$3x + 7y = 21$ ..... (1)

$y = 4$ ..... (2)

<u>x-intercept</u>

Put $y = 0$ in eq. (1)

$3x + 7(0) = 21$

$3x = 21$

$x = \frac{21}{3} = 7$

$\therefore$ Point is (7, 0)

<u>y-intercept</u>

Put $x = 0$ in eq. (1)

$3(0) + 7y = 21$

$7y = 21$

$y = \frac{21}{7} = 3$

$\therefore$ Point is (0, 3)

<u>Test Point</u>

Put (0, 0) in

$3x + 7y > 21$

$3(0) + 7(0) > 21$

$0 > 21$

Which is false.

$\therefore$ Graph of an inequality $3x + 7y \geq 21$ will not be towards the origin side.

Put $y = 0$ in

$y < 4$

$0 < 4$

Which is true.

$\therefore$ Graph of an inequality $y \leq 4$ will be towards the origin side.

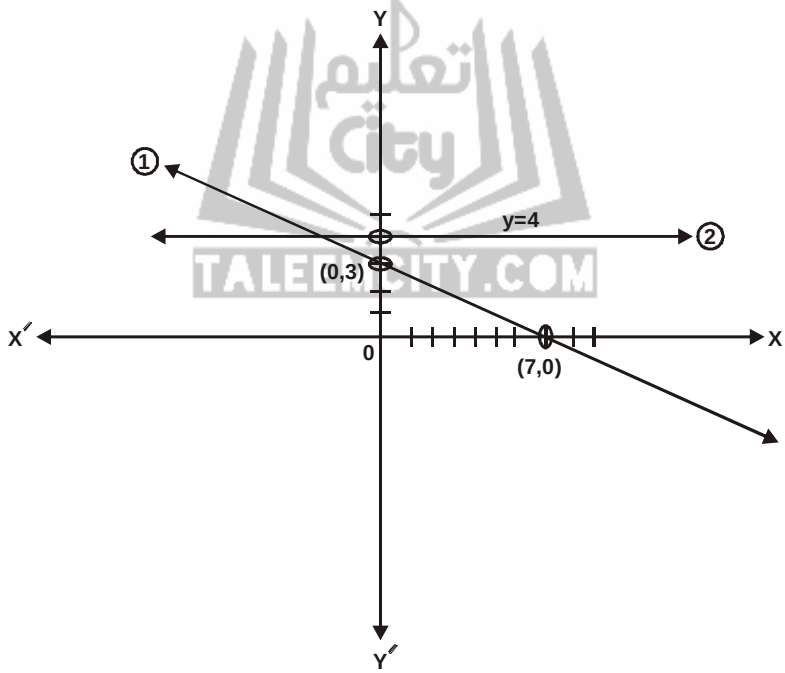

Q.3: Indicate the solution region of the following systems of linear inequalities by shading.

(i) $2x - 3y \leq 6$, $2x + 3y \leq 12$, $y \geq 0$

(ii) $x + y \leq 5$, $y - 2x \leq 2$, $x \geq 0$

(iii) $x + y \geq 5$, $x - y \geq 1$, $y \geq 0$

(iv) $3x + 7y \leq 21$, $x - y \leq 2$, $x \geq 0$

(v) $3x + 7y \leq 21$, $x - y \leq 2$, $y \geq 0$

(vi) $3x + 7y \leq 21$, $2x - y \geq -3$, $x \geq 0$

Solution:

(i) $2x - 3y \leq 6$ **(Lhr. Board 2007)**

$2x + 3y \leq 12$

$y \geq 0$

The associated equations are

$2x - 3y = 6$ ..... (1)

$2x + 3y = 12$ ..... (2)

<u>x-intercept</u>

Put $y = 0$ in eq. (1)

$2x - 3(0) = 6$

$2x = 6$

$x = \frac{6}{2} = 3$

$\therefore$ Point is (3, 0)

<u>y-intercept</u>

Put $x = 0$ in eq. (1)

$2(0) - 3y = 6$

$-3y = 6$

$y = \frac{6}{-3} = -2$

$\therefore$ Point is (0, – 2)

<u>x-intercept</u>

Put $y = 0$ in eq. (2)

$2x + 3(0) = 12$

$2x = 12$

$x = \frac{12}{2} = 6$

$\therefore$ Point is (6, 0)

<u>y-intercept</u>

Put $x = 0$ in eq. (2)

$2(0) + 3y = 12$

$3y = 12$

$y = \frac{12}{3} = 4$

$\therefore$ Point is (0, 4)

<u>Test Point</u>

Put (0, 0) in

$2x - 3y < 6$

$2(0) - 3(0) < 6$

$0 < 6$

Which is true.

$\therefore$ Graph of an inequality $2x - 3y \leq 6$ will be towards the origin side.

Put (0, 0) in

$2x + 3y < 12$

$2(0) + 3(0) < 12$

$0 < 12$

Which is true.

$\therefore$ Graph of an inequality $2x + 3y \leq 12$ will be towards the origin side.

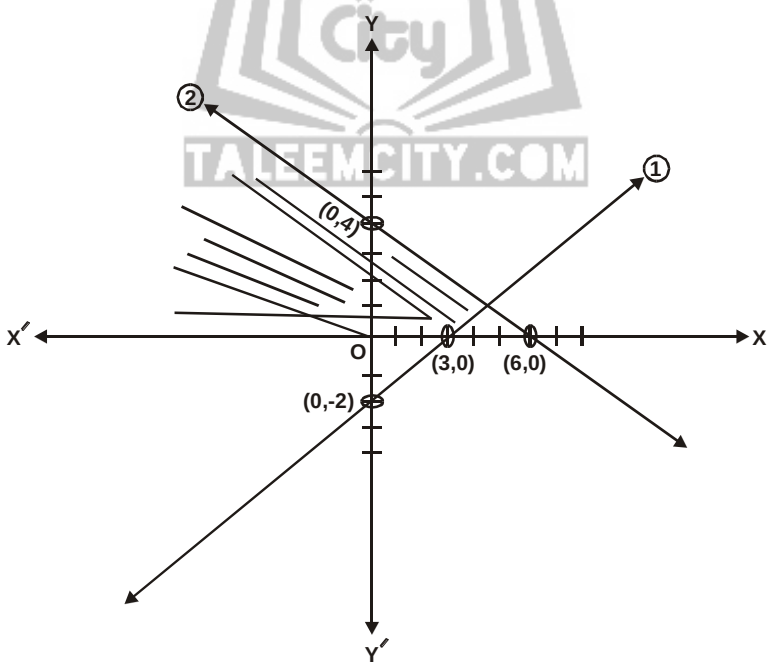

(ii) $\mathbf{x + y \leq 5}$

$\mathbf{y - 2x \leq 2}$

$\mathbf{x \geq 0}$

The associated equations are

$x + y = 5$ ..... (1)

$y - 2x = 2$ ..... (2)

<u>x-intercept</u>

Put $y = 0$ in eq. (1)

$x + 0 = 5$

$x = 5$

$\therefore$ Point is (5, 0)

<u>y-intercept</u>

Put $x = 0$ in eq. (1)

$0 + y = 5$

$y = 5$

$\therefore$ Point is (0, 5)

<u>x-intercept</u>

Put $y = 0$ in eq. (2)

$0 - 2x = 2$

$x = \frac{2}{-2} = -1$

$\therefore$ Point is (– 1, 0)

<u>y-intercept</u>

Put $x = 0$ in eq. (2)

$y - 2(0) = 2$

$y = 2$

$\therefore$ Point is (0, 2)

<u>Test Point</u>

Put (0, 0) in

$x + y < 5$

$0 + 0 < 5$

$0 < 5$

Which is true.

$\therefore$ Graph of an inequality $x + y \leq 5$ will towards the origin side.

Put (0, 0) in

$y - 2x < 2$

$0 - 2(0) < 2$

$0 < 2$

Which is true.

$\therefore$ Graph of an inequality $y - 2x \leq 2$ will towards the origin side.

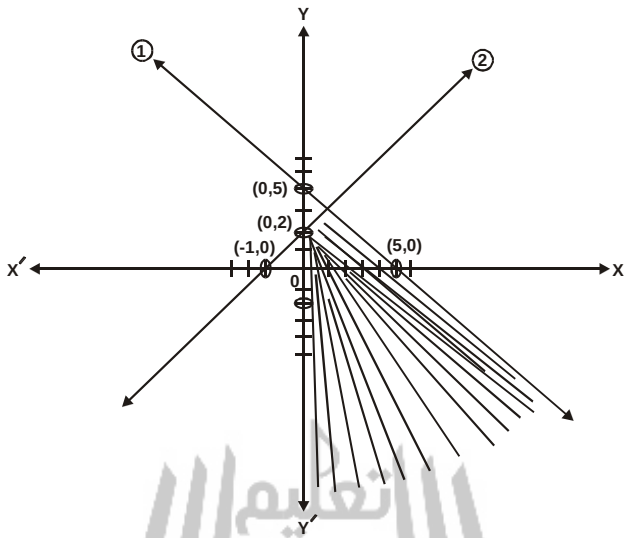

(iii) $\mathbf{x + y \geq 5}$

$\mathbf{x - y \geq 1}$

$\mathbf{y \geq 0}$

The associated equations are

$x + y = 5$ .... (1)

$x - y = 1$ .... (2)

<u>x–intercept</u>

Put $y = 0$ in eq. (1)

$x + 0 = 5$

$x = 5$

$\therefore$ Point is (5, 0)

<u>y–intercept</u>

Put $x = 0$ in eq. (1)

$0 + y = 5$

$y = 5$

$\therefore$ Point is (0, 5)

<u>x–intercept</u>

Put $y = 0$ in eq. (2)

$x - 0 = 1$

$x = 1$

$\therefore$ Point is (1, 0)

<u>y–intercept</u>

Put $x = 0$ in eq. (2)

$0 - y = 1$

$y = -1$

$\therefore$ Point is (0, – 1)

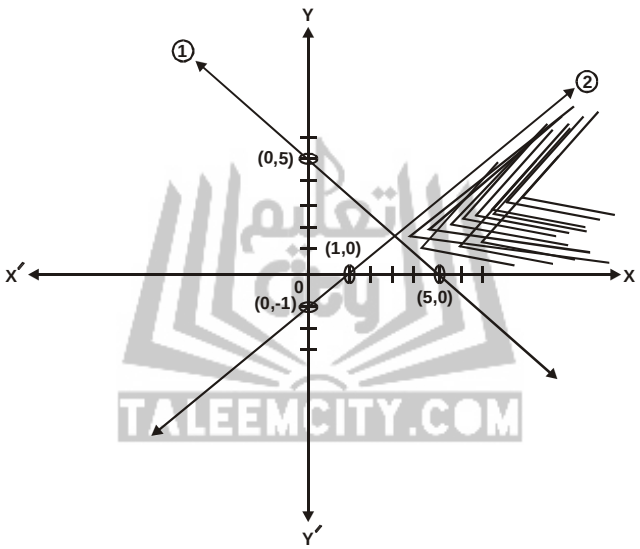

<u>Test Point</u>

Put (0, 0) in

$x + y > 5$

$0 + 0 > 5$

$0 > 5$

Which is false.

$\therefore$ Graph of an inequality $x + y \geq 5$ will not be towards the origin side.

Put (0, 0) in

$x - y > 1$

$0 - 0 > 1$

$0 > 1$

Which is false.

$\therefore$ Graph of an inequality $x - y \geq 1$ will not be towards the origin side.

(iv) $\mathbf{3x + 7y \leq 21}$

$\mathbf{x - y \leq 2}$

$\mathbf{x \geq 0}$

The associated equations are

$3x + 7y = 21$ ..... (1)

$x - y = 2$ ..... (2)

<u>x-intercept</u>

Put $y = 0$ in eq. (1)

$3x + 7(0) = 21$

$3x = 21$

$x = \frac{21}{3} = 7$

$\therefore$ Point is (7, 0)

<u>y–intercept</u>

Put $x = 0$ in eq. (1)

$3(0) + 7y = 21$

$7y = 21$

$y = \frac{21}{7} = 3$

$\therefore$ Point is (0, 3)

<u>x–intercept</u>

Put $y = 0$ in eq. (2)

$x - 0 = 2$

$x = 2$

$\therefore$ Point is (2, 0)

<u>y–intercept</u>

Put $x = 0$ in eq. (2)

$0 - y = 2$

$y = -2$

$\therefore$ Point is (0, – 2)

<u>Test Point</u>

Put (0, 0) in

$3x + 7y < 21$

$3(0) + 7(0) < 21$

$0 < 21$

Which is true.

$\therefore$ Graph of an inequality $3x + 7y \leq 21$ will be towards the origin side.

Put (0, 0) in

$x - y < 2$

$0 - 0 < 2$

$0 < 2$

Which is true.

$\therefore$ Graph of an inequality $x - y \leq 2$ will be towards the origin side.

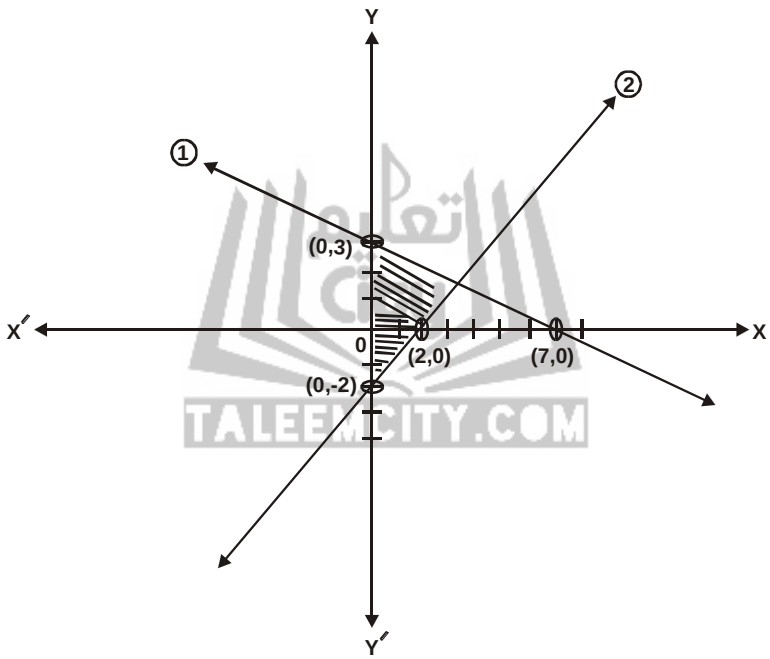

(v) $\mathbf{3x + 7y \leq 21}$ **(Gujranwala Board 2007)**

$\mathbf{x - y \leq 2}$

$\mathbf{y \geq 0}$

The associated equations are

$3x + 7y = 21$ ..... (1)

$x - y = 2$ ..... (2)

<u>x-intercept</u>

Put $y = 0$ in eq. (1)

$$3x + 7(0) = 21$$
$$3x = 21$$
$$x = \frac{21}{3} = 7$$

$\therefore$ Point is (7, 0)

<u>y–intercept</u>

Put $x = 0$ in eq. (1)

$$3(0) + 7y = 21$$
$$7y = 21$$
$$y = \frac{21}{7} = 3$$

$\therefore$ Point is (0, 3)

<u>x-intercept</u>

Put $y = 0$ in eq. (2)

$$x - 0 = 2$$
$$x = 2$$

$\therefore$ Point is (2, 0)

<u>y-intercept</u>

Put $x = 0$ in eq. (2)

$$0 - y = 2$$
$$y = -2$$

$\therefore$ Point is (0, – 2)

<u>Test Point</u>

Put (0, 0) in

$$3x + 7y < 21$$
$$3(0) + 7(0) < 21$$
$$0 < 21$$

Which is true.

$\therefore$ Graph of an inequality $3x + 7y \leq 21$ will be towards the origin side.

Put (0, 0) in

$$x - y < 2$$
$$0 - 0 < 2$$

$0 < 2$

Which is true.

$\therefore$ Graph of an inequality $x - y \leq 2$ will be towards the origin side.

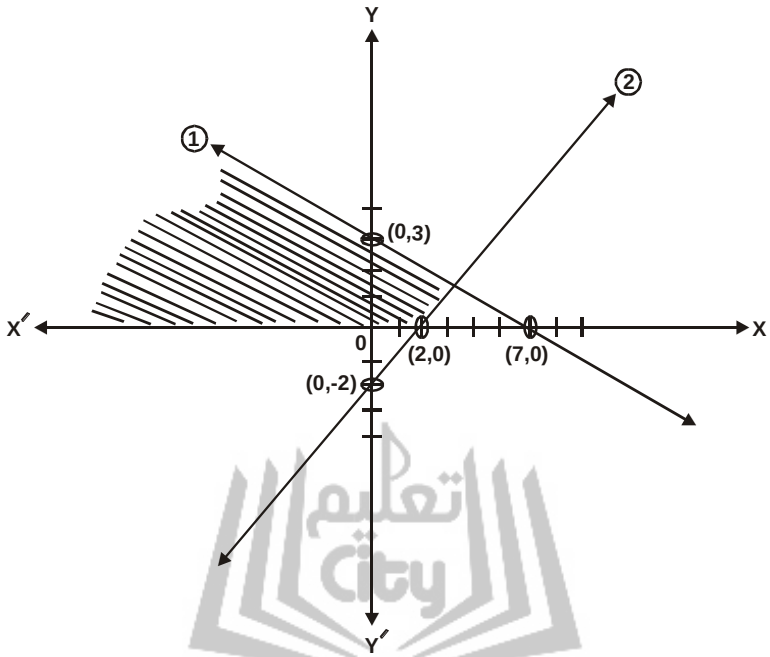

(vi) $\mathbf{3x + 7y \leq 21}$ **(Gujranwala Board 2006)**

$\mathbf{2x - y \geq -3}$

$\mathbf{x \geq 0}$

The associated equations are

$3x + 7y = 21$ ..... (1)

$2x - y = -3$ ..... (2)

<u>x-intercept</u>

Put $y = 0$ in eq. (1)

$3x + 7(0) = 21$

$3x = 21$

$x = \frac{21}{3} = 7$

$\therefore$ Point is (7, 0)

<u>y–intercept</u>

Put $x = 0$ in eq. (1)

$3(0) + 7y = 21$

$7y = 21$

$y = \frac{21}{7} = 3$

$\therefore$ Point is (0, 3)

<u>x-intercept</u>

Put $y = 0$ in eq. (2)

$2x - 0 = -3$

$x = \frac{-3}{2}$

$\therefore$ Point is $\left(\frac{-3}{2}, 0\right)$

<u>y-intercept</u>

Put $x = 0$ in eq. (2)

$2(0) - y = -3$

$-y = -3$

$y = 3$

$\therefore$ Point is (0, 3)

<u>Test Point</u>

Put (0, 0) in

$3x + 7y < 21$

$3(0) + 7(0) < 21$

$0 < 21$

Which is true.

$\therefore$ Graph of an inequality $3x + 7y \leq 21$ will be towards the origin side.

Put (0, 0) in

$2x - y > -3$

$2(0) - 0 > -3$

$0 > -3$

Which is true.

$\therefore$ Graph of an inequality $2x - y \geq -3$ will be towards the origin side.

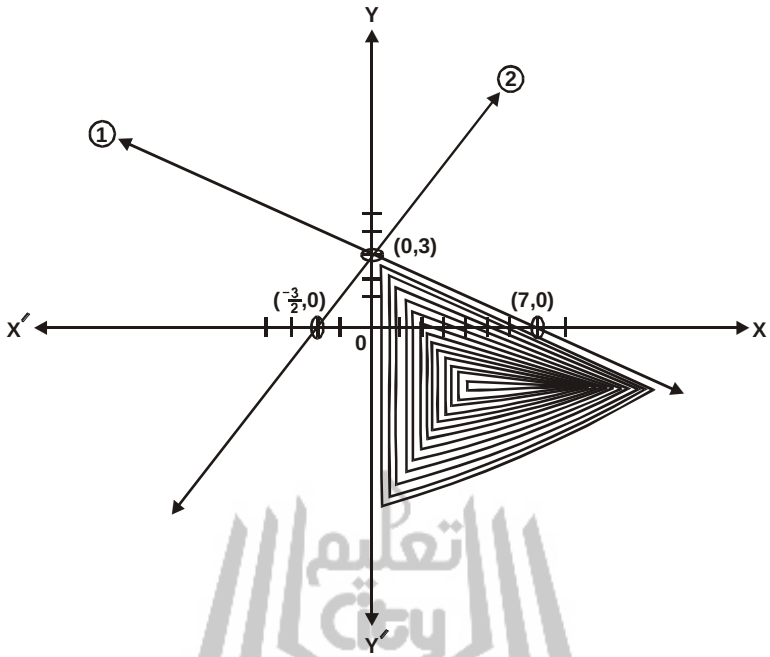

Q.4: Graph the solution region of the following system of linear inequalities and find the corner points in each case.

(i)	$2x - 3y \leq 6$	**(ii)**	$x + y \leq 5$	**(iii)**	$3x + 7y \leq 21$
	$2x + 3y \leq 12$		$-2x + y \leq 2$		$2x - y \leq -3$
	$x \geq 0$		$y \geq 0$		$y \geq 0$
(iv)	$3x + 2y \geq 6$	**(v)**	$5x + 7y \leq 35$	**(vi)**	$5x + 7y \leq 35$
	$x + 3y \leq 6$		$-x + 3y \leq 3$		$x - 2y \leq 2$
	$y \geq 0$		$x \geq 0$		$x \geq 0$

Solution:

(i) $2x - 3y \leq 6$

$2x + 3y \leq 12$

$x \geq 0$

The associated equations are

$2x - 3y = 6$ ..... (1)

$2x + 3y = 12$ ..... (2)

<u>x-intercept</u>

Put $y = 0$ in eq. (1)

$2x - 3(0) = 6$

$2x = 6$

$x = \frac{6}{2} = 3$

$\therefore$ Point is (3, 0)

<u>y-intercept</u>

Put $x = 0$ in eq. (1)

$2(0) - 3y = 6$

$-3y = 6$

$y = \frac{6}{-3} = -2$

$\therefore$ Point is (0, – 2)

<u>x-intercept</u>

Put $y = 0$ in eq. (2)

$2x + 3(0) = 12$

$x = 12$

$x = \frac{12}{2} = 6$

$\therefore$ Point is (6, 0)

<u>y-intercept</u>

Put $x = 0$ in eq. (2)

$2(0) + 3y = 12$

$3y = 12$

$y = \frac{12}{3} = 4$

$\therefore$ Point is (0, 4)

<u>Test Point</u>

Put (0, 0) in

$2x - 3y < 6$

$2(0) - 3(0) < 6$

$0 < 6$

Which is true.

$\therefore$ Graph of an inequality $2x - 3y \leq 6$ will be towards the origin side.

Put (0, 0) in

$2x + 3y < 12$

$2(0) + 3(0) < 12$

$0 < 12$

Which is true.

$\therefore$ Graph of an inequality $2x + 3y \leq 12$ will be towards the origin side.

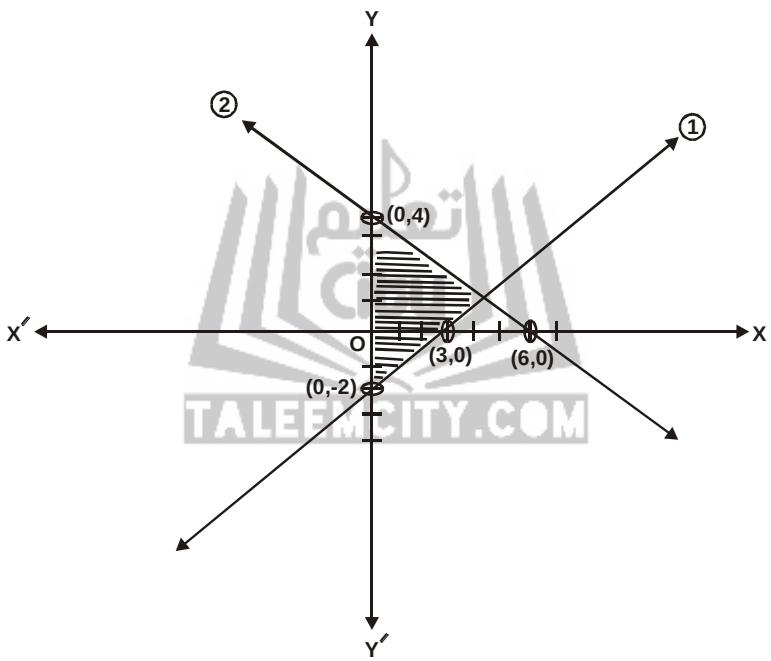

To find the intersection of both the lines solving eq. (1) & eq. (2)

Adding eq. (1) and eq. (2)

$$\begin{aligned} 2x - 3y &= 6 \\ \underline{2x + 3y} &\underline{= 12} \\ 4x &= 18 \\ x &= \frac{18}{4} = \frac{9}{2} \end{aligned}$$

Put $x = \frac{9}{2}$ in eq. (1)

$$2\left(\frac{9}{2}\right) - 3y = 6$$

$$9 - 3y = 6$$

$$y = \frac{8}{3} = 1$$

$\therefore$ Point $\left(\frac{9}{2}, 1\right)$

So the corner points are $(0, -2)$, $\left(\frac{9}{2}, 1\right)$ $(0, 4)$

(ii) $\mathbf{x + y \leq 5}$

$\mathbf{-2x + y \leq 2}$

$\mathbf{y \geq 0}$

The associated equations are

$x + y = 5$ ..... (1)

$y - 2x = 2$ ..... (2)

<u>x-intercept</u>

Put $y = 0$ in eq. (1)

$$x + 0 = 5$$

$$x = 5$$

$\therefore$ Point is (5, 0)

<u>y-intercept</u>

Put $x = 0$ in eq. (1)

$$0 + y = 5$$

$$y = 5$$

$\therefore$ Point is (0, 5)

<u>x-intercept</u>

Put $y = 0$ in eq. (2)

$$0 - 2x = 2$$

$$x = \frac{2}{-2} = -1$$

$\therefore$ Point is (– 1, 0)

<u>y-intercept</u>

Put $x = 0$ in eq. (2)

$y - 2(0) = 2$

$y = 2$

$\therefore$ Point is (0, 2)

<u>Test Point</u>

Put (0, 0) in

$x + y < 5$

$0 + 0 < 5$

$0 < 5$

Which is true.

$\therefore$ Graph of an inequality $x + y \leq 5$ will towards the origin side.

Put (0, 0) in

$y - 2x < 2$

$0 - 2(0) < 2$

$0 < 2$

Which is true.

$\therefore$ Graph of an inequality $y - 2x \leq 2$ will towards the origin side.

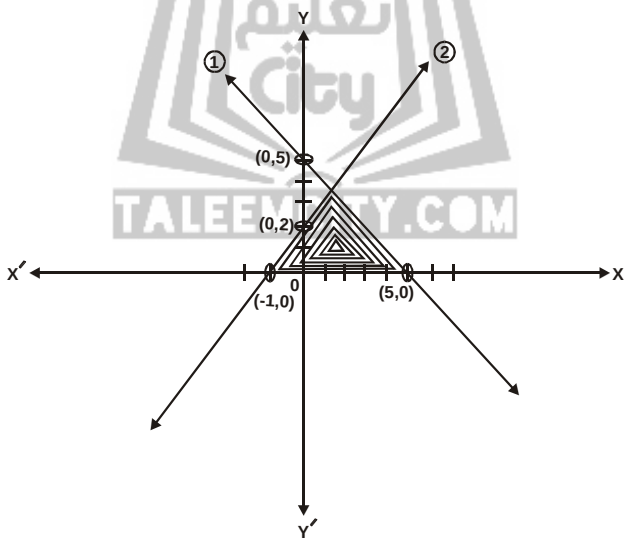

To find the intersection of both the lines solving eq. (1) & eq. (2).

Equation (1) – Eq. (2), we get

$$\begin{array}{rcl} x + y & = & 5 \\ -2x \pm y & = & -2 \\ \hline 3x & = & 3 \end{array}$$

$$x = \frac{3}{3} = 1$$

Put $x = 1$ in eq. (1)

$1 + y = 5$

$y = 5 - 1 = 4$

$\therefore$ Point $(1, 4)$

So the corner points are $(-1, 0)$, $(5, 0)$, $(1, 4)$

(iii) $\mathbf{3x + 7y \leq 21}$

$\mathbf{2x - y \leq -3}$

$\mathbf{y \geq 0}$

The associated equations are

$3x + 7y = 21$ ..... (1)

$2x - y = -3$ ..... (2)

<u>x-intercept</u>

Put $y = 0$ in eq. (1)

$3x + 7(0) = 21$

$3x = 21$

$x = \frac{21}{3} = 7$

$\therefore$ Point is $(7, 0)$

<u>y–intercept</u>

Put $x = 0$ in eq. (1)

$3(0) + 7y = 21$

$7y = 21$

$y = \frac{21}{7} = 3$

$\therefore$ Point is $(0, 3)$

<u>x-intercept</u>

Put $y = 0$ in eq. (2)

$2x - 0 = -3$

$x = \frac{-3}{2}$

$\therefore$ Point is $\left(\frac{-3}{2}, 0\right)$

<u>y-intercept</u>

Put $x = 0$ in eq. (2)

$2(0) - y = -3$

$-y = -3$

$y = 3$

$\therefore$ Point is (0, 3)

<u>Test Point</u>

Put (0, 0) in

$3x + 7y < 21$

$3(0) + 7(0) < 21$

$0 < 21$

Which is true.

$\therefore$ Graph of an inequality $3x + 7y \leq 21$ will not be towards the origin side.

Put (0, 0) in

$2x - y < -3$

$2(0) - 0 < -3$

$0 < -3$

Which is false.

$\therefore$ Graph of an inequality $2x - y \leq -3$ will not be towards the origin side.

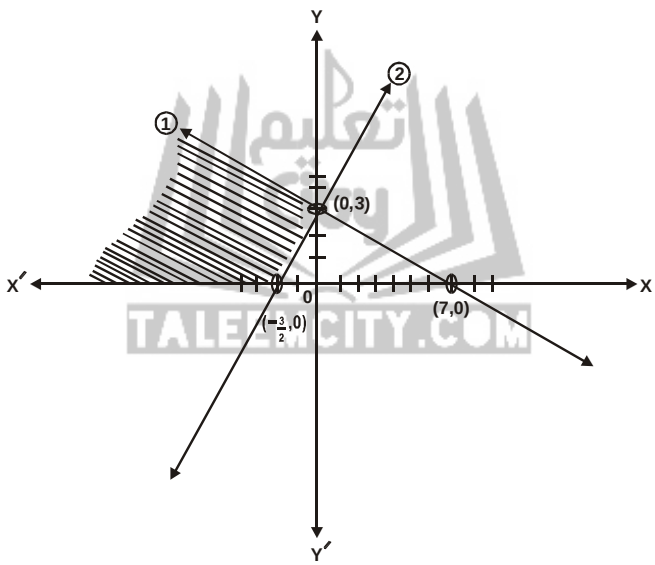

So the corner points are $\left(\frac{-3}{2}, 0\right)$ (0, 3)

(iv) $\mathbf{3x + 2y \geq 6}$

$\mathbf{x + 3y \leq 6}$

$\mathbf{y \geq 0}$

The associated equations are

$3x + 2y = 6$ ..... (1)

$x + 3y = 6$ ..... (2)

<u>x-intercept</u>

Put $y = 0$ in eq. (1)

$3x + 2(0) = 6$

$3x = 6$

$x = \frac{6}{3} = 2$

$\therefore$ Point is (2, 0)

<u>y–intercept</u>

Put $x = 0$ in eq. (1)

$3(0) + 2y = 6$

$y = \frac{6}{2} = 3$

$\therefore$ Point is (0, 3)

<u>x-intercept</u>

Put $y = 0$ in eq. (2)

$x + 3(0) = 6$

$x = 6$

$\therefore$ Point is (6, 0)

<u>y-intercept</u>

Put $x = 0$ in eq. (2)

$0 + 3y = 6$

$y = \frac{6}{3}$

$y = 2$

$\therefore$ Point is (0, 2)

<u>Test Point</u>

Put (0, 0) in

$3x + 2y > 6$

$3(0) + 2(0) > 6$

$0 < 6$

Which is false.

$\therefore$ Graph of an inequality $3x + 2y \geq 6$ will not be towards the origin side.

Put (0, 0) in

$x + 3y < 6$

$0 - 3(0) < 6$

$0 < 6$

Which is true.

$\therefore$ Graph of an inequality $x + 3y \leq 6$ will be towards the origin side.

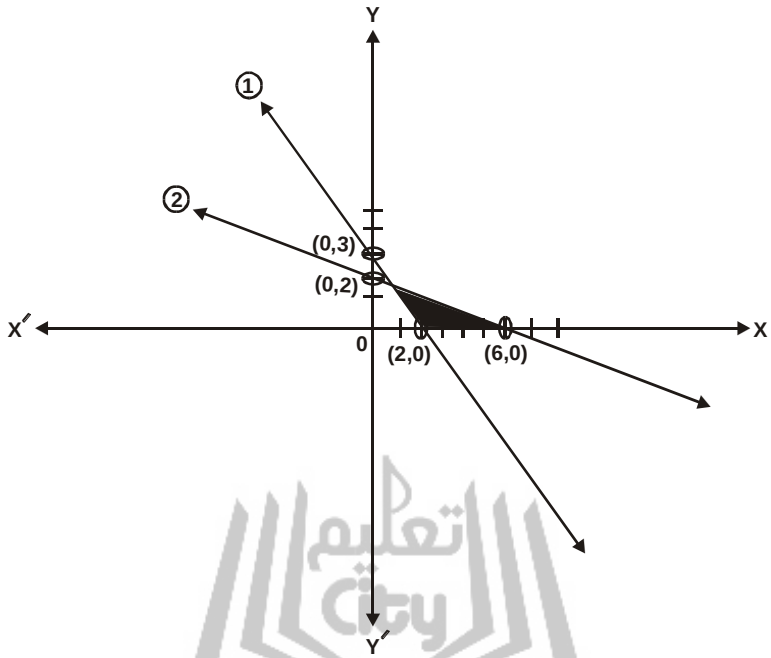

To find the intersection of both the equations solving eq. (1) & eq. (2)

Eq. (1) – Eq. (2) × 3, we get

$$\begin{aligned} 3x + 2y &= 6 \\ \underline{-3x \pm 9y} &\underline{= -18} \\ -7y &= -12 \\ y &= \frac{12}{7} \end{aligned}$$

Put $y = \frac{12}{7}$ in eq. (2)

$$x + 3\left(\frac{12}{7}\right) = 6$$

$$x + \frac{36}{7} = 6$$

$$x = 6 - \frac{36}{7}$$

$$x = \frac{42-36}{7}$$

$$= \frac{6}{7}$$

$\therefore$ Point $\left(\frac{6}{7}, \frac{12}{7}\right)$

So the corner points are (2, 0), (6, 0), $\left(\frac{6}{7}, \frac{12}{7}\right)$

(v) $\mathbf{5x + 7y \leq 35}$

$\mathbf{-x + 3y \leq 3}$

$\mathbf{x \geq 0}$

The associated equations are

$5x + 7y = 35$ ..... (1)

$-x + 3y = 3$ ..... (2)

<u>x-intercept</u>

Put $y = 0$ in eq. (1)

$5x + 7(0) = 35$

$5x = 35$

$x = \frac{35}{5} = 7$

$\therefore$ Point is (7, 0)

<u>y–intercept</u>

Put $x = 0$ in eq. (1)

$5(0) + 7y = 35$

$y = \frac{35}{7} = 5$

$\therefore$ Point is (0, 5)

<u>x-intercept</u>

Put $y = 0$ in eq. (2)

$-x + 3(0) = 3$

$-x = 3$

$x = -3$

$\therefore$ Point is (– 3, 0)

<u>y-intercept</u>

Put $x = 0$ in eq. (2)

$-0 + 3y = 3$

$$y = \frac{3}{3} = 1$$

$\therefore$ Point is (0, 1)

<u>Test Point</u>

Put (0, 0) in

$5x + 7y < 35$

$5(0) + 7(0) < 35$

$0 < 35$

Which is true.

$\therefore$ Graph of an inequality $5x + 7y \leq 35$ will be towards the origin side.

Put (0, 0) in

$-x + 3y < 3$

$-0 + 3(0) < 3$

$0 < 3$

Which is true.

$\therefore$ Graph of an inequality $-x + 3y \leq 6$ will be towards the origin side.

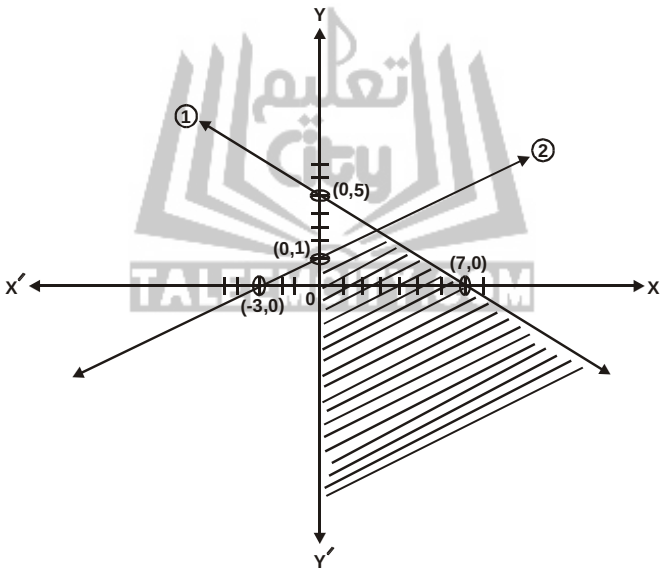

To find the intersection of both the equations solving eq. (1) & eq. (2)

Eq. (1) – Eq. (2) × 5, we get

$$\begin{aligned} 5x + 7y &= 35 \\ \underline{-5x + 15y} &\underline{= 15} \\ 22y &= 50 \\ y &= \frac{50}{22} = \frac{25}{11} \end{aligned}$$

Put $y = \frac{25}{11}$ in eq. (2)

$$-x + 3\left(\frac{25}{11}\right) = 3$$

$$\frac{75}{11} - 3 = x$$

$$x = \frac{42}{11}$$

$\therefore$ Point $\left(\frac{42}{11}, \frac{25}{11}\right)$

So the corner points are (0,1), $\left(\frac{42}{11}, \frac{25}{11}\right)$

(vi) $\mathbf{5x + 7y \leq 35}$

$\mathbf{x - 2y \leq 2}$

$\mathbf{x \geq 0}$

The associated equations are

$5x + 7y = 35$ ..... (1)

$x - 2y = 2$ ..... (2)

<u>x-intercept</u>

Put $y = 0$ in eq. (1)

$5x + 7(0) = 35$

$$x = \frac{35}{5} = 7$$

$\therefore$ Point is (7, 0)

<u>y-intercept</u>

Put $x = 0$ in eq. (1)

$5(0) + 7y = 35$

$$x = \frac{35}{7} = 5$$

$\therefore$ Point is (0, 5)

<u>x-intercept</u>

Put $y = 0$ in eq. (2)

$x - 2(0) = 2$

$x = 2$

$\therefore$ Point is (2, 0)

<u>y-intercept</u>

Put $x = 0$ in eq. (2)

$0 - 2y = 2$

$y = \frac{2}{-2} = -1$

$\therefore$ Point is $(0, -1)$

<u>Test Point</u>

Put $(0, 0)$ in

$5x + 7y < 35$

$5(0) + 7(0) < 35$

$0 < 35$

Which is true.

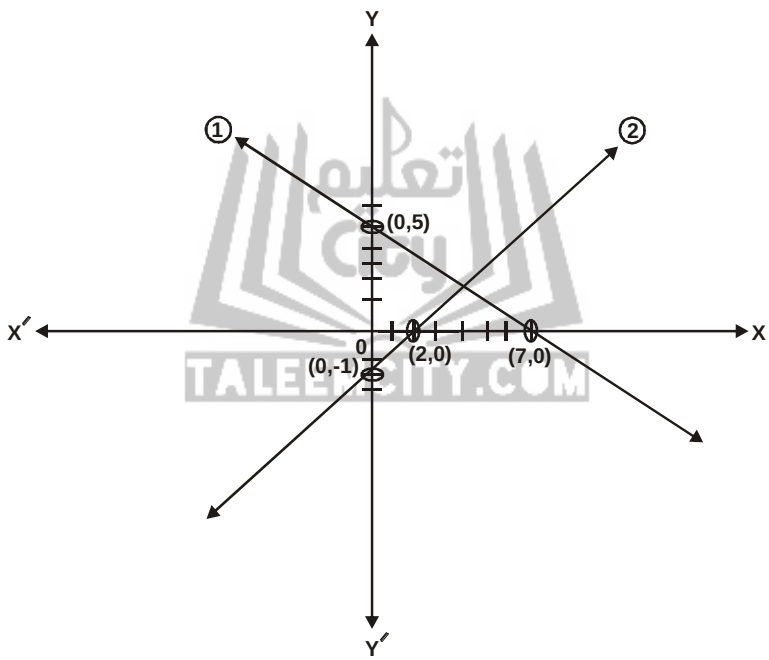

$\therefore$ Graph of an inequality $5x + 7y \leq 35$ will be towards the origin side.

Put $(0, 0)$ in

$x - 2y < 2$

$0 - 2(0) < 2$

$0 < 2$

Which is true.

$\therefore$ Graph of an inequality $x - 2y \leq 4$ will be towards the origin side.

To find the intersection of both is the equations solving eq. (1) & eq. (2)

Eq. (1) – Eq. (2) × 5, we get

$$5x + 7y = 35$$
$$\underline{-5x \mp 10y = -10}$$
$$17y = 25$$
$$y = \frac{25}{17}$$

Put $y = \frac{25}{17}$ in eq. (2), we get

$$x - 2\left(\frac{25}{17}\right) = 2$$
$$x - \frac{50}{17} = 2$$
$$x = 2 + \frac{50}{17}$$
$$x = \frac{34 + 50}{17}$$
$$x = \frac{84}{17}$$
$$\therefore \text{ Point } \left(\frac{84}{17}, \frac{25}{17}\right)$$

So the corner points are $\left(\frac{84}{17}, \frac{25}{17}\right)$, (0, 5), (0, – 2)

Q.5: Graph the solution region of the following system of linear inequalities by shading.

(i) $3x - 4y \leq 12$
$3x + 2y \geq 3$
$x + 2y \leq 9$

(ii) $3x - 4y \leq 12$
$x + 2y \leq 6$
$x + y \geq 1$

(iii) $2x + y \leq 4$
$2x - 3y \geq 12$
$x + 2y \leq 6$

(iv) $2x + y \leq 10$
$x + y \leq 7$
$-2x + y \leq 4$

(v) $2x + 3y \leq 18$
$2x + y \leq 10$
$-2x + y \leq 2$

(vi) $3x - 2y \geq 3$
$x + 4y \leq 12$
$3x + y \leq 12$

Solution:

(i) $\mathbf{3x - 4y \leq 12}$

$\mathbf{3x + 2y \geq 3}$

$\mathbf{x + 2y \leq 9}$

The associated equations are

$3x - 4y = 12$ .... (1)

$3x + 2y = 3$ .... (2)

$x + 2y = 9$ .... (3)

<u>x-intercept</u>

Put y = 0 in eqs. (1), (2) and (3)

$3x - 4(0) = 12$	$3x + 2(0) = 3$	$x + 2(0) = 9$
$3x = 12$	$3x = 3$	$x = 9$
$x = \frac{12}{3} = 4$	$x = \frac{3}{3} = 1$	$\therefore$ Point is (9, 0)
$\therefore$ Point is (4, 0)	$\therefore$ Point is (1, 0)	

<u>y-intercept</u>

Put x = 0 in eqs. (1), (2) and (3)

$3(0) - 4y = 12$	$3(0) + 2y = 3$	$0 + 2y = 9$
$y = \frac{12}{-4} = -3$	$y = \frac{3}{2}$	$y = \frac{9}{2}$
$\therefore$ Point is (0, – 3)	$\therefore$ Point is $\left(0, \frac{3}{2}\right)$	$\therefore$ Point is $\left(0, \frac{9}{2}\right)$

<u>Test Point</u>

Put (0, 0) in

$3x - 4y < 12$

$3(0) - 4(0) < 12$

$0 < 12$

Which is true.

$\therefore$ Graph of an inequality $3x - 4y \leq 12$ will be towards the origin side.

Put (0, 0) in

$3x + 2y > 3$

$3(0) + 2(0) > 3$

$0 > 3$

which is false.

$\therefore$ Graph of an inequality $3x + 2y \geq 3$ will not be towards the origin side.

Put (0, 0) in

$x + 2y < 9$

$0 + 2(0) < 9$

$0 < 9$

Which is true.

$\therefore$ Graph of an inequality $x + 2y \leq 9$ will be towards the origin side.

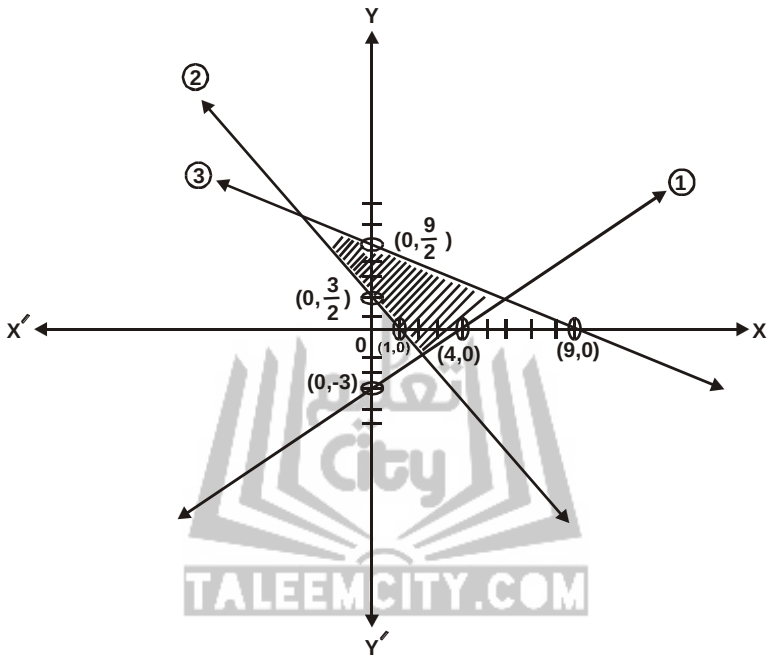

(ii) $\mathbf{3x - 4y \leq 12}$

$\mathbf{x + 2y \leq 6}$

$\mathbf{x + y \geq 1}$

The associated equations are

$3x - 4y = 12$ .... (1)

$x + 2y = 6$ .... (2)

$x + y = 1$ .... (3)

<u>x-intercept</u>

Put y = 0 in equations (1), (2) and (3)

$3x - 4(0) = 12$	$x + 2(0) = 6$	$x + 0 = 1$
$3x = 12$	$x = 6$	$x = 1$

$x = \frac{12}{3} = 4$ $\therefore$ Point is (4, 0)	$\therefore$ Point is (6, 0)	$\therefore$ Point is (1, 0)

<u>y-intercept</u>

Put x = 0 in equations (1), (2) and (3)

$3(0) - 4y = 12$ $y = \frac{12}{-4} = -3$ $\therefore$ Point is (0, – 3)	$0 + 2y = 6$ $y = \frac{6}{2} = 3$ $\therefore$ Point is (0, 3)	$0 + y = 1$ $y = 1$ $\therefore$ Point is (0, 1)

<u>Test Point</u>

Put (0, 0) in

$3x - 4y < 12$

$3(0) - 4(0) < 12$

$0 < 12$

Which is true.

$\therefore$ Graph of an inequality $3x - 4y \leq 12$ will be towards the origin side.

Put (0, 0) in

$x + 2y < 6$

$0 + 2(0) < 6$

$0 < 6$

Which is true.

$\therefore$ Graph of an inequality $x + 2y \leq 6$ will not be towards the origin side.

Put (0, 0) in

$x + y > 1$

$0 + 0 > 1$

$0 > 1$

Which is false.

$\therefore$ Graph of an inequality $x + y \geq 1$ will not be towards the origin side.

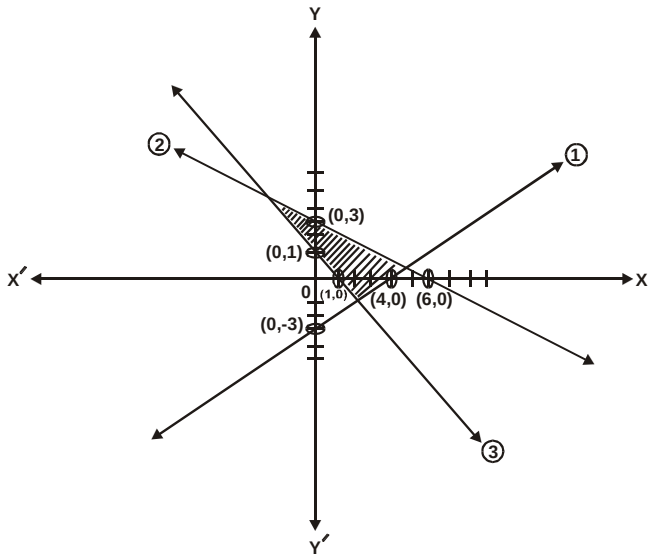

(iii) $\mathbf{2x + y \leq 4}$

$\mathbf{2x - 3y \geq 12}$

$\mathbf{x + 2y \leq 6}$

The associated equations are

$2x + y = 4$ .... (1)

$2x - 3y = 12$ .... (2)

$x + 2y = 6$ .... (3)

<u>x-intercept</u>

Put y = 0 in equations (1), (2) and (3)

$2x + 0 = 4$	$2x - 3(0) = 12$	$x + 2(0) = 6$
$x = \frac{4}{2} = 2$	$2x = 12$	$x = 6$
$\therefore$ Point is (2, 0)	$x = \frac{12}{2} = 6$	$\therefore$ Point is (6, 0)
	$\therefore$ Point is (6, 0)	

<u>y-intercept</u>

Put x = 0 in equations (1), (2) and (3)

$2(0) + y = 4$	$2(0) - 3y = 12$	$0 + 2y = 6$
$y = 4$	$y = \frac{12}{-3} = -4$	$y = \frac{6}{2} = 3$
$\therefore$ Point is (0, 4)	$\therefore$ Point is (0, – 4)	$\therefore$ Point is (0, 3)

Test Point

Put (0, 0) in

$2x + y < 4$

$2(0) + 0 < 4$

$0 < 4$

Which is true.

$\therefore$ Graph of an inequality $2x + y \leq 4$ will be towards the origin side.

Put (0, 0) in

$2x - 3y > 12$

$2(0) - 3(0) > 12$

$0 > 12$

Which is false.

$\therefore$ Graph of an inequality $2x - 3y \geq 12$ will not be towards the origin side.

Put (0, 0) in

$x + 2y < 6$

$0 + 2(0) < 6$

$0 < 6$

Which is true.

$\therefore$ Graph of an inequality $x + 2y \leq 6$ will be towards the origin side.

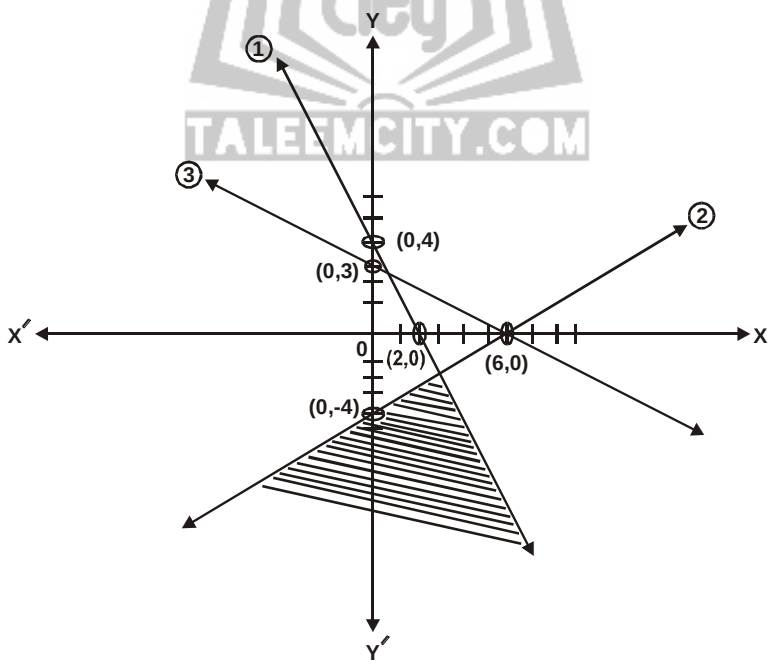

(iv) $\mathbf{2x + y \leq 10}$

$\mathbf{x + y \leq 7}$

$-2x + y \leq 4$

The associated equations are

$2x + y = 10$ .... (1)

$x + y = 7$ .... (2)

$-2x + y = 4$ .... (3)

<u>x-intercept</u>

Put y = 0 in equations (1), (2) and (3)

$2x + 0 = 10$	$x + 0 = 7$	$-2x + 0 = 4$
$x = \frac{10}{2} = 5$	$x = 7$	$x = \frac{4}{-2} = -2$
$\therefore$ Point is (5, 0)	$\therefore$ Point is (7, 0)	$\therefore$ Point is (– 2, 0)

<u>y-intercept</u>

Put x = 0 in equations (1), (2) and (3)

$2(0) + y = 10$	$0 + y = 7$	$-2(0) + y = 4$
$y = 10$	$y = 7$	$y = 4$
$\therefore$ Point is (0, 10)	$\therefore$ Point is (0, 7)	$\therefore$ Point is (0, 4)

<u>Test Point</u>

Put (0, 0) in

$2x + y < 10$

$2(0) + 0 < 10$

$0 < 10$

Which is true.

$\therefore$ Graph of an inequality $2x + y \leq 10$ will be towards the origin side.

Put (0, 0) in

$x + y < 7$

$0 + 0 < 7$

$0 < 7$

Which is true.

$\therefore$ Graph of an inequality $x + y \leq 7$ will be towards the origin side.

Put (0, 0) in

$-2x + y < 4$

$-2(0) + 0 < 4$

$0 < 4$

Which is true.

$\therefore$ Graph of an inequality $-2x + y \leq 4$ will be towards the origin side.

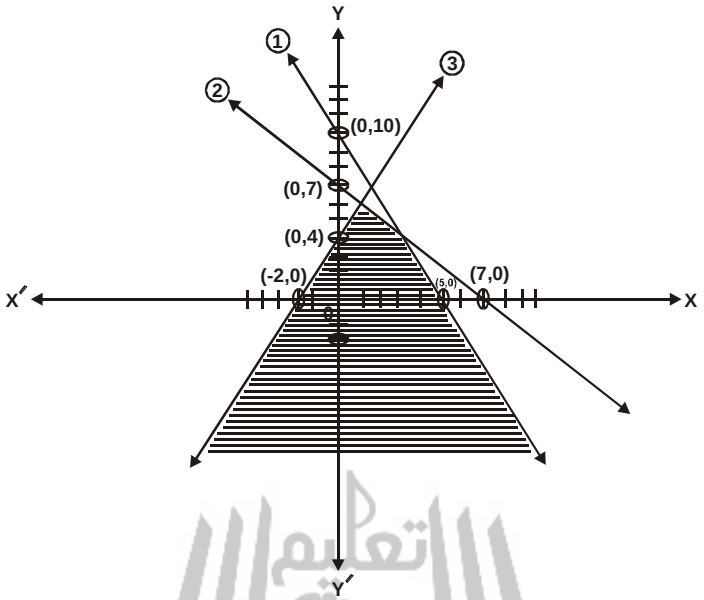

(v) $\mathbf{2x + 3y \leq 18}$

$\mathbf{2x + y \leq 10}$

$\mathbf{-2x + y \leq 2}$

The associated equations are

$2x + 3y = 18$ .... (1)

$2x + y = 10$ .... (2)

$-2x + y = 2$ .... (3)

<u>x-intercept</u>

Put $y = 0$ in equations (1), (2) and (3)

$2x + 3(0) = 18$	$2x + 0 = 10$	$-2x + 0 = 2$
$2x = 18$	$2x = 10$	$x = \frac{2}{-2} = -1$
$x = \frac{18}{2} = 9$	$x = \frac{10}{2} = 5$	$\therefore$ Point is $(-1, 0)$
$\therefore$ Point is $(9, 0)$	$\therefore$ Point is $(5, 0)$	

<u>y-intercept</u>

Put x = 0 in equations (1), (2) and (3)

$2(0) + 3y = 18$
$3y = 18$
$y = \frac{18}{3} = 6$
$\therefore$ Point is (0, 6)

$2(0) + y = 10$
$y = 10$
$\therefore$ Point is (0, 10)

$-2(0) + y = 2$
$y = 2$
$\therefore$ Point is (0, 2)

<u>Test Point</u>

Put (0, 0) in
$2x + 3y < 18$
$2(0) + 3(0) < 18$
$0 < 18$
Which is true.

$\therefore$ Graph of an inequality $2x + 3y \leq 18$ will be towards the origin side.

Put (0, 0) in
$2x + y < 10$
$2(0) + 0 < 10$
$0 < 10$
Which is true.

$\therefore$ Graph of an inequality $2x + y \leq 10$ will be towards the origin side.

Put (0, 0) in
$-2x + y < 2$
$-2(0) + 0 < 2$
$0 < 2$
Which is true.

$\therefore$ Graph of an inequality $-2x + y \leq 2$ will be towards the origin side.

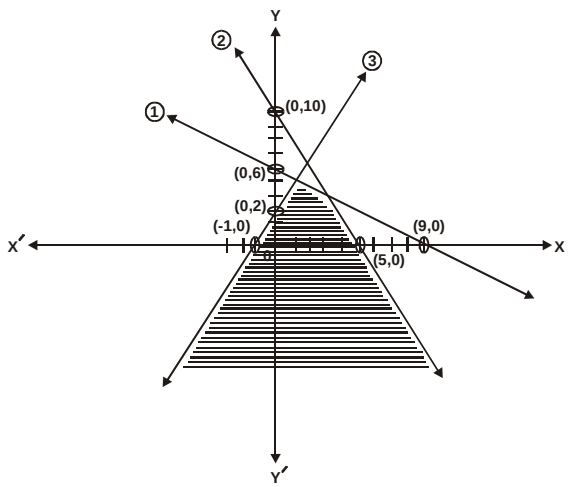

(vi) $\mathbf{3x - 2y \geq 3}$

$\mathbf{x + 4y \leq 12}$

$\mathbf{3x + y \leq 12}$

The associated equations are

$3x - 2y = 3$ .... (1)

$x + 4y = 12$ .... (2)

$3x + y = 12$ .... (3)

<u>x-intercept</u>

Put y = 0 in equations (1), (2) and (3)

$3x - 2(0) = 3$ $3x = 3$ $x = \frac{3}{3} = 1$ $\therefore$ Point is (1, 0)	$x + 4(0) = 12$ $x = 12$ $\therefore$ Point is (12, 0)	$3x + 0 = 12$ $x = \frac{12}{3} = 4$ $\therefore$ Point is (4, 0)

<u>y-intercept</u>

Put x = 0 in equations (1), (2) and (3)

$3(0) - 2y = 3$ $y = \frac{3}{-2}$ $\therefore$ Point is $\left(0, \frac{-3}{2}\right)$	$0 + 4y = 12$ $y = \frac{12}{4} = 3$ $\therefore$ Point is (0, 3)	$3(0) + y = 12$ $y = 12$ $\therefore$ Point is (0, 12)

<u>Test Point</u>

Put (0, 0) in

$3x - 2y > 3$

$3(0) - 2(0) > 3$

$0 > 3$

Which is false.

$\therefore$ Graph of an inequality $3x - 2y \geq 3$ will not be towards the origin side.

Put (0, 0) in

$x + 4y < 12$

$0 + 4(0) < 12$

$0 < 12$

Which is true.

$\therefore$ Graph of an inequality $x + 4y \leq 12$ will be towards the origin side.

Put (0, 0) in

$3x + y < 12$

$3(0) + 0 < 12$

$0 < 12$

Which is true.

$\therefore$ Graph of an inequality $3x + y \leq 12$ will be towards the origin side.

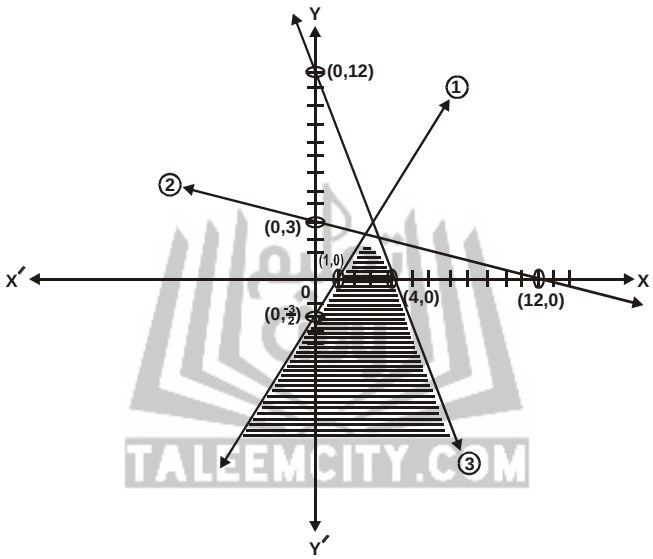

EXERCISE 5.2

Q.4: Graph the feasible region of the following system of linear inequalities and find the corner points in each case.

(i)	$2x - 3y \leq 6$	**(ii)**	$x + y \leq 5$	**(iii)**	$x + y \leq 5$
	$2x + 3y \leq 12$		$-2x + y \leq 2$		$-2x + y \geq 2$
	$x \geq 0 \;,\; y \geq 0$		$x \geq 0 \,,\, y \geq o$		$x \geq 0 \,,\, y \geq 0$
(iv)	$3x + 7y \leq 21$	**(v)**	$3x + 2y \geq 6$	**(vi)**	$5x + 7y \leq 35$
	$x - y \leq 3$		$x + y \leq 4$		$x - 2y \leq 4$
	$x \geq 0 \;,\; y \geq 0$		$x \geq 0 \;,\; y \geq 0$		$x \geq 0 \;,\; y \geq 0$